Graphic Era HILL UNIVERSITY
Established by an Act of the State Legislature of Uttarakhand (Adhiniyam Sankhya 12 of 2011)
University under section 2(f) of UGC Act, 1956

End Term (Odd) Semester Examination December 2024

Roll no.....

Name of the Course and semester: B.Tech VII semester
Name of the Paper: COMPUTER NETWORKS-II
Paper Code: TCS- 703

Time: 3-hour Maximum Marks: 100

Note:

(i) All the questions are compulsory.
(ii) Answer any two sub questions from a, b and c in each main question.
(iii) The total mark for each question is 20 (twenty).
(iv) Each sub-question carries 10 marks.

Q1. (2X10=20 Marks) **CO 1**

a. Discuss the need for routing protocols. Consider the following network. With the indication link costs, use LS algorithm to compute the shortest path from node 'A' to all network nodes. Explain global knowledge.

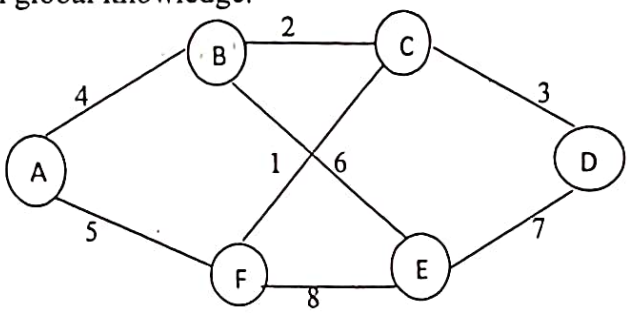

b. Analyze Global and Centralized routing protocol. Apply DV routing protocols on given diagram and calculate modified routing table at node 'A'.

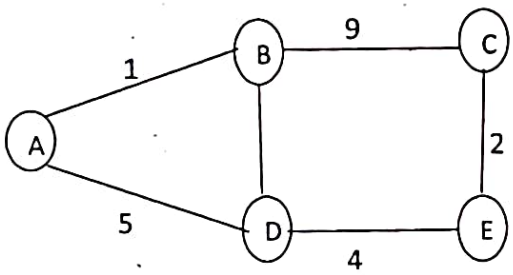

c. Calculate the maximum frame rate a node on Ethernet (assume 10mbps link).Consider a CSMA/CD network that transmit data at a rate of 100 Mbps over a 1 km cable with no repeaters. If the minimum frame size required for this network is 1250 byte, What is the signal speed in the cable? **CO2**

Q2. (2X10=20 Marks) **CO 2**

a. Discuss primary services provided by link layer in the OSI model? Discuss the concept of VLAN and types f VLAN membership.

End Term (Odd) Semester Examination December 2024

b. Calculate maximum efficiency for slotted ALOHA. A slotted ALOHA network transmits 200 bits frames using a shared channel with a 200-kbps bandwidth. Find the throughput of the system, if the system (all station put together) produces 250 frames per second.

c. Write the steps used in CRC for error detection. Suppose the original data is 11100 and divisor is 1001. What CRC generator and CRC receiver will do to check the error.

Q3. (2X10=20 Marks) CO 3

a. Realize issues for supporting real time and multimedia traffic over public network and Discuss their roles in Video Conferencing. Discuss RTP packet header fields. How are RTP and RTCP packets (as part of the same session) distinguished?

b. (i) Enumerate, how RTSP is like HTTP.
(ii) Briefly discuss Multimedia networking

c. Explain the key differences between SIP and H.323 protocols. Describe the process of session establishment and termination in SIP and H.323.

Q4. (2X10=20 Marks) **CO 4**

a. Explain the concept of generalized forwarding in the context of SDN. How does SDN enable network programmability and flexibility?

b. Discusses the key functions of an SDN controller? How do SDN controllers enhance network security?

c. Explain the separation of control and data planes in OpenFlow. How does the OpenFlow protocol facilitate communication between the controller and switches?

Q5. (2X10=20 Marks) **CO 5**

a. Elaborate on the difference between TCP and UDP protocols working strategy. Discuss the purpose of the bind function in socket programming?

b. Discuss elementary UDP sockets and UDP echo server. Explain raise condition Write about lack of flow control with UDP.

c. Analyze the implementation process of creating a TCP socket in a network application. Show the sequence of operations for a TCP server to accept a client connection.